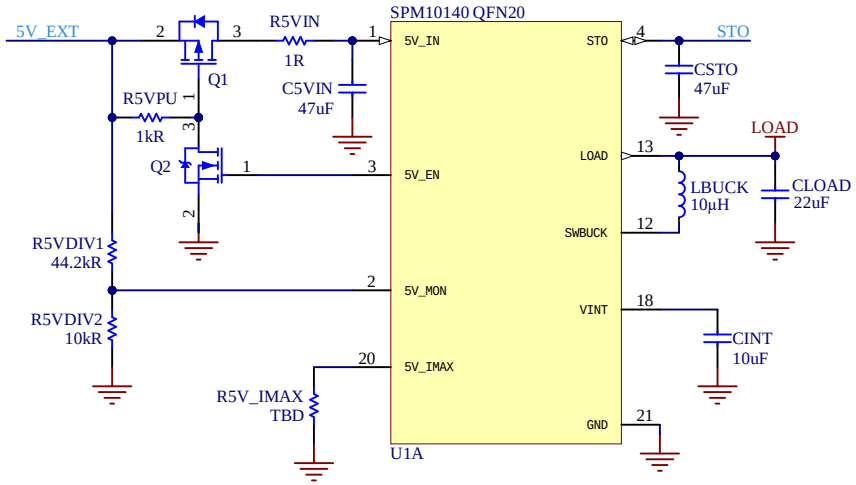

$150\ \Omega \leq R5V_IMAX \leq 1.2\ k\Omega$

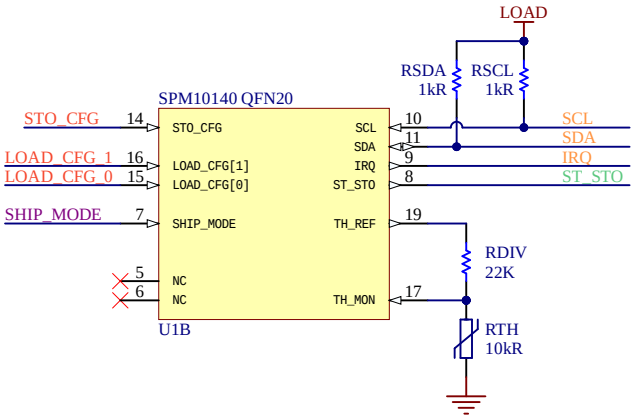

Title: ***SPM10140 QFN20 Snippet***		*e-peas S.A.* *Bd Baudouin 1er N°19* *1348 Ottignies-Louvain-La-Neuve* *Belgium*
Date: 09-Nov-26	Size: A4	
File: SPM10140_QFN20_Snippet.SchDoc	Sheet 1 of 1	