APPLICATION NOTE

AEM13921
APM Calibration Procedure

Copyright © 2026 e-peas SA

Table of Contents

1. Introduction **3**
2. Equipment **3**
2.1. Source Measurement Unit (SMU) ... 3
2.2. Power Supply Unit (PSU) ... 3
3. SRCx boost converter APM calibration **4**
3.1. Calibration output ... 4
3.2. Hardware setup ... 4
3.3. Determine the operating conditions ... 5
3.4. Calibration protocol ... 6
3.4.1. Step 1: Supply STO ... 6
3.4.2. Step 2: Supply SRCx ... 6
3.4.3. Step 3: Configure the AEM13921 registers through I²C communication 7
3.4.4. Step 4: Run the measurement and determine the α_{SRCx} factor ... 8
3.4.5. Step 5: Apply the calibration result ... 8
4. LOAD buck APM calibration **9**
4.1. Calibration output ... 9
4.2. Hardware setup ... 9
4.3. Determine the operating conditions ... 10
4.4. Calibration protocol ... 11
4.4.1. Step 1: Supply STO ... 11
4.4.2. Step 2: Coldstart the AEM13921 ... 11
4.4.3. Step 3: Configure the AEM13921 registers through I²C communication . 12
4.4.4. Step 4: Run the measurement and determine the α_{LOAD} factor ... 13
4.4.5. Step 5: Apply the calibration result ... 13
5. 5V_IN (5V charger) APM calibration **14**
5.1. Calibration output ... 14
5.2. Hardware setup ... 14
5.3. Determine the operating conditions ... 14
5.4. Calibration protocol ... 15
5.4.1. Step 1: Supply STO ... 15
5.4.2. Step 2: Coldstart the AEM13921 ... 15
5.4.3. Step 3: Configure the AEM13921 registers through I²C communication . 15
5.4.4. Step 4: Measure the 5V charger current ... 16
5.4.5. Step 5: Apply the calibration result ... 16
6. Revision history **17**

Copyright © 2026 e-peas SA

1. Introduction

The AEM13921 Average Power Monitoring (APM) functionality allows the user to determine the power flowing in and out of the storage element connected to the STO pin:

- From the harvesters connected to the SRCx pins (boost converters)
- To the application circuit connected to the LOAD pin (buck converter)
- From the 5 V charger connected to the 5V_IN pin.

The core principle of the calibration is to determine, for a given hardware implementation and for a given AEM13921 specimen, the factor that allows for converting the values read in the APM data registers (APMxSRCx, APMxLOAD and APMxCHG5V) to instantaneous electrical power, as seen by the storage element. This parameter is referred in the datasheet as the α parameter for the boost and buck converters, subscripted with the corresponding DCDC converter. The α factor is dimensionless.

Please note that the APM data can be integrated for determining the energy that the corresponding DCDC converter has transferred during a period of time. To do so with accuracy, the APM window must be determined by the applicative circuit, typically by measuring the time between two rising edges of the IRQ pin.

In this document, the notation SRCx stands for "either SRC1 or SRC2", and is used for the tests that are to be performed using the same procedure on both sources.

It is recommended that calibration is performed once per specimen at room temperature. Temperature affects the precision with which the APM measures power/energy.

The content of this document assumes that the reader has read the AEM13921 datasheet.

2. Equipment

The following equipment is needed for the described calibrations:

2.1. Source Measurement Unit (SMU)

A Source Measurement Unit (SMU) is a high-precision, 4-quadrant laboratory instrument that tightly integrates the capabilities of a precision power supply and a high-performance digital multimeter. It operates in two primary modes:

- **Voltage Source Mode**: The SMU regulates a precise voltage across the Device Under Test (DUT) by dynamically sourcing or sinking current. A user-defined current compliance (limit) is set to protect the circuit. The SMU maintains voltage regulation as long as the current demanded by the DUT remains below this compliance limit.
- **Current Source Mode**: The SMU forces a precise, constant current through the DUT by dynamically adjusting the output voltage. A user-defined voltage compliance (limit) is set to prevent overvoltage conditions. The SMU maintains current regulation as long as the resulting voltage across the DUT - dictated by its impedance ($V = I \times R$) - does not exceed this compliance limit.

2.2. Power Supply Unit (PSU)

Some of the tests described in this document require a power supply that provides a regulated voltage output with sufficient current capability to perform the tests described. It can be either a proper laboratory Power Supply Unit (PSU), or the output of a voltage regulator.

Copyright © 2026 e-peas SA

3. SRCx boost converter APM calibration

3.1. Calibration output

The output of the SRCx boost converter calibration is the α_{SRCx} factor, which is the factor that allows for converting the APM data - read in the AEM13921 APMxSRCx register - to an electrical power value, as shown below:

$$P_{STO,SRCx} = \alpha_{SRCx} \cdot APM_{SRCx}$$

- $P_{STO,SRCx}$ is the power extracted from SRCx and provided to STO.
- APM_{SRCx} is the APM data value read in the AEM13921 register APMxSRCx.

3.2. Hardware setup

The calibration of the SRCx boost converter APM requires the following equipment:

- 1 computer with Windows OS running the AEM13921 Configuration GUI.
- 1 circuit with the AEM13921 and its external components:
  - The calibration must be done for each circuit specimen.
  - The harvester(s), storage element and application circuit must be disconnected from the AEM13921 circuit.
- 1 Source Measurement Unit (SMU). Using the SMU in four-wire mode is optional but leads to more accurate results.
- 1 Power Supply Unit (PSU).
- 1 resistor, whose value is determined in Section 3.3.

Wire the equipment as shown in Figure 1. The calibration has to be done for each source SRCx separately.

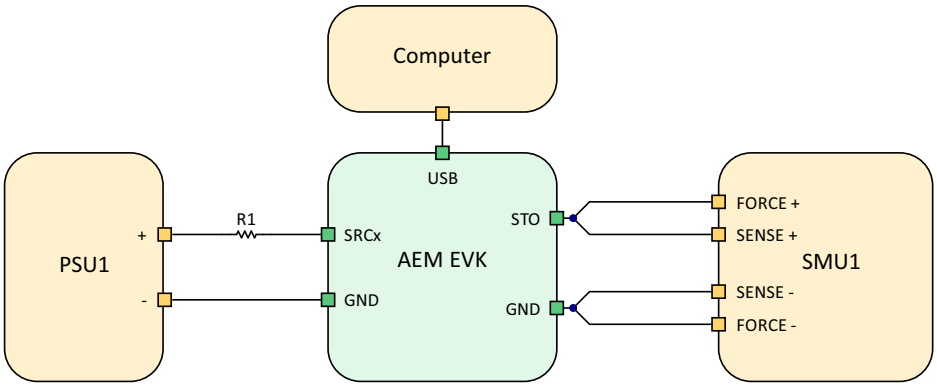

Figure 1: SRCx boost converter APM calibration base setup

The calibration process begins with both SMU1 and PSU1 switched OFF.

Copyright © 2026 e-peas SA

3.3. Determine the operating conditions

Best results are achieved when the user calibrates the α_{SRCx} factor as close as possible to the expected system operating conditions described in the current section.

Storage element calibration voltage

The storage element voltage range is defined by setting the following parameters of the AEM13921:

- V_{OVDIS} is the minimum voltage below which the storage element is considered to be fully discharged.
- V_{OVCH} is the maximum voltage above which the storage element is considered to be fully charged.

The calibration voltage $V_{STO,CALIB}$ on STO is then determined as follows:

$$V_{STO,CALIB} = \frac{V_{OVCH} + V_{OVDIS}}{2}$$

Source(s) calibration voltage

The source voltage range is to be determined from the specifications of the harvester(s).

- $V_{MPP,MIN}$ is the harvester's minimum Maximum Power Point (MPP) voltage, typically obtained when the harvester is under the lowest ambient energy (e.g. for a PV cell, the lowest considered luminosity).
- $V_{MPP,MAX}$ is the harvester's maximum MPP voltage, typically obtained when the harvester is under the highest ambient energy (e.g. for a PV cell, the highest considered luminosity).

Please note that this has to be done for both SRC1 and SRC2 when using the both sources of the AEM13921.

The calibration voltage $V_{SRCx,CALIB}$ on SRCx is determined as follows:

$$V_{SRCx,CALIB} = \frac{V_{MPP,MAX} + V_{MPP,MIN}}{2}$$

Source series resistance and PSU voltage

Select a source series resistance R1 between 100 Ω and 1 kΩ and the PSU voltage V_{PSU1} as follows, to obtain a source current of roughly 10 mA:

$$V_{PSU1} = R1 \cdot 10 \times 10^{-3} + V_{SRCx,CALIB}$$

$$V_{PSU1} < V_{STO}$$

Please note that the exact value of the source current is not critical as only the current on STO matters for determining the α_{SRCx} factor. Any source current between 5 mA and 15 mA is fine for calibrating the APM, but V_{PSU1} must be configured so that its voltage is below V_{STO}.

 Copyright © 2026 e-peas SA

3.4. Calibration protocol

3.4.1. Step 1: Supply STO

Referring to Figure 1, configure SMU1 as follows:

- **Mode**: Voltage source.
- **Voltage**: Set the voltage of SMU1 to $V_{STO,CALIB}$ as determined in Section 3.3.
- **Current compliance**: Set the current compliance to 100 mA.
- **Measurement mode**: Four-wire measurement mode is preferred for best measurement accuracy. Two-wire mode works as well if four-wire mode is not available.

Switch ON SMU1.

3.4.2. Step 2: Supply SRCx

Referring to Figure 1, configure PSU1 as follows:

- **Voltage**: Set the voltage of PSU1 V_{PSU1} so that it is at least 500 mV above $V_{SRCx,CALIB}$ as determined in Section 3.3. Also make sure that $V_{SRCx,CALIB}$ is below the storage element voltage $V_{STO,CALIB}$.
- **Current compliance**: Set the current compliance to 100 mA (at least higher than I_{R1}).
- Place R1 - as determined in Section 3.3 - between PSU1 positive terminal and the AEM13921 EVK SRCx terminal.

Switch ON PSU1.

Wait a few seconds for the AEM13921 to coldstart. Cold start is finished when VINT reaches its 2.2 V regulation voltage.

 Copyright © 2026 e-peas SA

3.4.3. Step 3: Configure the AEM13921 registers through I²C communication

Use the AEM13921 Configuration GUI, that can be downloaded from *e-peas website*.

Make sure to set the following parameters according to the operating conditions defined in Section 3.3:

- Boost settings:
  - Enable HP.
  - Set the boost timing multiplier according to the target application requirements.
- Source settings:
  - Set SRCx mode to constant voltage.
  - Set the constant voltage level to $V_{SRCx,CALIB}$.
- Storage element threshold voltages:
  - Set V_{OVDIS} at least 300 mV below $V_{STO,CALIB}$.
  - Set V_{CHRDY} at least 200 mV below $V_{STO,CALIB}$.
  - Set V_{OVCH} at least 200 mV above $V_{STO,CALIB}$.
- Disable the LOAD buck converter.
- APM configuration:
  - Enable the APM for the source SRCx that is being calibrated.
  - Set the APM mode to “power”.
  - Set the APM window to the one required by the application (generally the longest available).
  - Set the APM accumulator to 1.
- Disable the thermal protection.
- Write the configuration to the AEM13921 and make sure writing is successful.

 Copyright © 2026 e-peas SA

3.4.4. Step 4: Run the measurement and determine the α_{SRCx} factor

In the Configuration GUI:

- Navigate to the “Monitoring” tab.
- Set the “ALPHA” parameter of the SRCx boost converter to 1.
- Click on the “Start Monitoring” button to start reading the APM.
- Click on “Reset Power Averaging”.

On SMU1, read the power that is provided from SRCx to STO. For best accuracy, use the averaging capability of the SMU and read the averaged value.

Let the measure run for about a minute and determine the α_{SRCx} factor as follows:

$$\alpha_{SRCx} = \frac{I_{STO,SMU} \cdot V_{STO,CALIB}}{APM_{SRCx,AVERAGE}} = \frac{P_{STO,SMU}}{APM_{SRCx,AVERAGE}}$$

- $APM_{SRCx,AVERAGE}$ is the average APM value as read on the AEM13921 Configuration GUI “APM Average [W]”.
- $I_{STO,SMU}$ is the (average) current read on SMU1.
- $P_{STO,SMU}$ is the (average) power read on SMU1.

3.4.5. Step 5: Apply the calibration result

Configuration GUI

Apply the previously determined α_{SRCx} factor to the configuration GUI field.

The power/energy results displayed when running the “Monitoring Mode” should be consistent with those transferred to the STO pin.

Application firmware

The values read from the APMxSRCx registers can now be converted to power (watts) by multiplying them by the α_{SRCx} factor. The energy (in Joules) can then be calculated by multiplying the power value by the duration of the APM window, ideally as measured by the application circuit.

 Copyright © 2026 e-peas SA

4. LOAD buck APM calibration

4.1. Calibration output

The output of the LOAD buck calibration is the α_{LOAD} factor, which is the factor that allows for converting the APM data - read in the AEM13921 APMxLOAD register - to an electrical power value, as shown below:

$$P_{STO,LOAD} = \alpha_{LOAD} \cdot APM_{LOAD}$$

- $P_{STO,LOAD}$ is the power provided by STO to LOAD.
- APM_{LOAD} is the APM data value read in the AEM13921 APMxLOAD register.

4.2. Hardware setup

The calibration of the LOAD APM requires the following equipment:

- 1 computer with Windows OS running the AEM13921 Configuration GUI.
- 1 circuit with the AEM13921 and its external components:
  - The calibration must be done for each circuit specimen.
  - The harvester(s), storage element and application circuit must be disconnected from the AEM13921 circuit.
- 1 Source Measurement Unit (SMU). Using the SMU in four-wire mode is optional but leads to more accurate results.
- 1 resistor, whose resistance is between 500 Ω and 2 kΩ (resistance precision is not critical).

Wire the equipment as shown in Figure 2. Please note that if the calibration of LOAD's buck converter is done right after the calibration of the SRCx boost converter (described in Section 3), PSU1 can be left connected to SRCx to coldstart the AEM13921. Otherwise, the AEM13921 can be coldstarted from the 5V charger as described in Section 4.4.2.

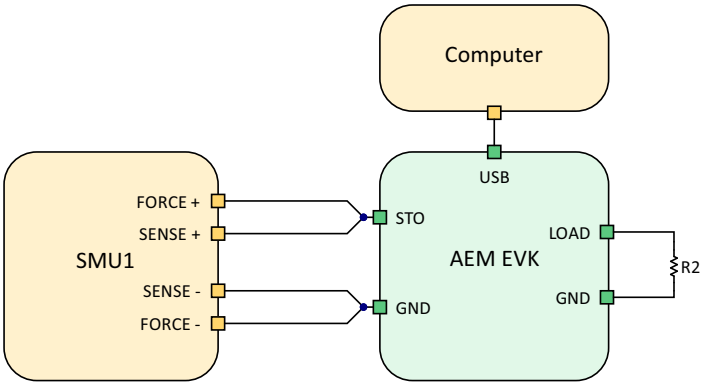

Figure 2: LOAD APM calibration base setup

The calibration process begins with SMU1 switched OFF.

Copyright © 2026 e-peas SA

4.3. Determine the operating conditions

Best results are achieved when the user calibrates the α_{LOAD} factor as close as possible to the expected system operating conditions:

Storage element calibration voltage

Determine the storage element voltage for calibration $V_{STO,CALIB}$ as described in Section 3.3.

LOAD resistance

Configure R2 so that a few mA (typically 5 mA) are pulled from the LOAD pin, considering the LOAD regulation voltage required by the application circuit.

$$R2 = \frac{V_{LOAD}}{10 \times 5^{-3}}$$

Please note that the exact value of the LOAD current is not critical as only the current on STO matters for determining the α_{LOAD} factor. Any source current between 1 mA and 15 mA is fine for calibrating the APM.

Copyright © 2026 e-peas SA

4.4. Calibration protocol

4.4.1. Step 1: Supply STO

Referring to Figure 2, configure SMU1 as follows:

- **Mode**: Voltage source.
- **Voltage**: Set the voltage of SMU1 to $V_{STO,CALIB}$ as determined in Section 4.3.
- **Current compliance**: Set the current compliance to 100 mA.
- **Measurement mode**: Four-wire measurement mode is preferred for best measurement accuracy. Two-wire mode works as well if four-wire mode is not available.

Switch ON SMU1.

4.4.2. Step 2: Coldstart the AEM13921

Two solutions for coldstarting the AEM13921:

- Use PSU1 from the SRCx calibration and set the voltage/current of PSU1 above the cold-start voltage/current defined in the datasheet. It is then mandatory to switch off/remove PSU1 for the calibration (PSU1 is not shown on Figure 2).
- Connect a jumper on the “VUSB-5V_IN” header and leave it for 10 seconds. Once the AEM13921 has coldstarted, it is mandatory to remove the jumper to continue with the calibration process.

Please note that the cold start is finished when VINT reaches its 2.2 V regulation voltage.

Copyright © 2026 e-peas SA

4.4.3. Step 3: Configure the AEM13921 registers through I²C communication

Use the AEM13921 Configuration GUI, that can be downloaded from *e-peas website*.

Make sure to set the following parameters according to the operating conditions defined in Section 4.3:

- Boost settings:
  - Disable both boost converters.
- Storage element threshold voltages:
  - Set V_{OVDIS} at least 300 mV below $V_{STO,CALIB}$.
  - Set V_{CHRDY} at least 200 mV below $V_{STO,CALIB}$.
  - Set V_{OVCH} at least 200 mV above $V_{STO,CALIB}$.
- LOAD buck converter configuration according to the application circuit requirements:
  - Set the buck timing multiplier.
  - Set the LOAD voltage.
- APM configuration:
  - Enable the APM for LOAD.
  - Set the APM mode to “power”.
  - Set the APM window to the one required by the application (generally the longest available).
  - Set the APM accumulator to 1.
- Disable the thermal protection.
- Write the configuration to the AEM13921 and make sure writing is successful.

 Copyright © 2026 e-peas SA

4.4.4. Step 4: Run the measurement and determine the α_{LOAD} factor

In the Configuration GUI:

- Navigate to the “Monitoring” tab.
- Set the “ALPHA” parameter of LOAD to 1.
- Click on the “Start Monitoring” button to start reading the APM.
- Click on “Reset Power Averaging”.

On SMU1, read the power that is provided from STO to LOAD. For best accuracy, use the averaging capability of the SMU and read the averaged value.

Let the measure run for about a minute and determine the α_{LOAD} factor as follows:

$$\alpha_{LOAD} = \frac{I_{STO,SMU} \cdot V_{STO,CALIB}}{APM_{LOAD,AVERAGE}} = \frac{P_{STO,SMU}}{APM_{LOAD,AVERAGE}}$$

- $APM_{LOAD,AVERAGE}$ is the average APM value as read on the AEM13921 Configuration GUI “APM Average [W]”
- $I_{STO,SMU}$ is the (average) current read on SMU1.
- $P_{STO,SMU}$ is the (average) power read on SMU1.

4.4.5. Step 5: Apply the calibration result

Configuration GUI

Apply the previously determined α_{LOAD} factor to the configuration GUI field.

The power/energy results displayed when running the “Monitoring Mode” should be consistent with those transferred from the STO pin.

Application firmware

The values read from the APMxLOAD registers can now be converted to power (watts) by multiplying them by the α_{LOAD} factor. The energy (in Joules) can then be calculated by multiplying the power value by the duration of the APM window, ideally as measured by the application circuit.

 Copyright © 2026 e-peas SA

5. 5V_IN (5V charger) APM calibration

5.1. Calibration output

Unlike the boost and buck converters, the 5V charger APM calibration does not produce an alpha factor. Its output is the actual charging current provided to STO.

Along with the APM period and the 5V charger's charging duty cycle (see AEM13921 datasheet), this value allows for calculating the power/energy transferred by the 5V charger to the storage element.

5.2. Hardware setup

The calibration of the 5V charger APM requires the following equipment:

- 1 computer with Windows OS running the AEM13921 Configuration GUI.
- 1 circuit with the AEM13921 and its external components:
  - The calibration must be done for each circuit specimen.
  - The harvester(s), storage element and application circuit must be disconnected from the AEM13921 circuit.
- 1 Source Measurement Unit (SMU). Using the SMU in four-wire mode is optional but leads to more accurate results.
- Optional: as shown in Figure 3, a PSU can be used as energy source for the 5V charger if the user does not want to pull the charging current USB from the computer.

Wire the equipment as shown in Figure 3.

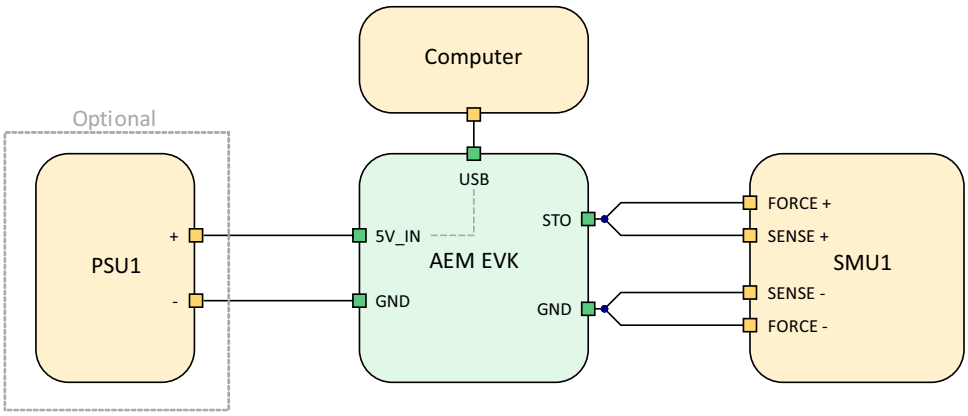

Figure 3: 5V charger APM calibration base setup

The calibration process begins with SMU1 (and optional PSU1) switched OFF.

5.3. Determine the operating conditions

Best results are achieved when the user calibrates the 5V charger current as close as possible to the expected system operating conditions:

Storage element calibration voltage

Determine the storage element voltage for calibration $V_{STO,CALIB}$ as described in Section 3.3.

5V charger current setting

The 5V charger current setting must be set according to the application circuit requirements, typically by the storage element maximum charging current.

Copyright © 2026 e-peas SA

5.4. Calibration protocol

5.4.1. Step 1: Supply STO

Referring to Figure 3, configure SMU1 as follows:

- **Mode**: voltage source.
- **Voltage**: set the voltage of SMU1 to $V_{STO,CALIB}$ as determined in Section 3.3.
- **Current compliance**: set the current compliance so that the SMU can absorb at least 1.5x the 5V charger current.
- **Measurement mode**: four-wire measurement mode is preferred for best measurement accuracy. Two-wire mode works as well if four-wire mode is not available.

Switch ON SMU1.

5.4.2. Step 2: Coldstart the AEM13921

Let the AEM13921 coldstart from the energy source connected to the 5V charger 5V_IN.

Please note that the cold start is finished when VINT reaches its 2.2 V regulation voltage.

5.4.3. Step 3: Configure the AEM13921 registers through I²C communication

Use the AEM13921 Configuration GUI, that can be downloaded from *e-peas website*.

Make sure to set the following parameters according to the operating conditions defined in Section 5.3:

- Boost settings:
  - Disable all boost converters.
- Storage element threshold voltages:
  - Set V_{OVDIS} at least 300 mV below $V_{STO,CALIB}$.
  - Set V_{CHRDY} at least 200 mV below $V_{STO,CALIB}$.
  - Set V_{OVCH} at least 200 mV above $V_{STO,CALIB}$.
- LOAD buck converter settings:
  - Disable the LOAD buck converter.
- 5V charger configuration:
  - Enable the 5V charger.
  - If constant voltage mode is to be enabled, make sure the threshold for constant voltage mode is at least 200 mV higher than $V_{STO,CALIB}$.
- APM configuration:
  - Enable the APM for the 5V charger.
  - Note: the APM mode does not have any impact on the 5V charger APM.
  - Set the APM window to the one required by the application (generally the longest available).
  - Set the APM accumulator to 1.
- Disable the thermal protection.
- Write the configuration to the AEM13921 and make sure writing is successful.

 Copyright © 2026 e-peas SA

5.4.4. Step 4: Measure the 5V charger current

Read the current $I_{STO,5V,SMU}$ sunk by SMU1, which is the current provided by the 5V charger to STO.

5.4.5. Step 5: Apply the calibration result

Configuration GUI

Apply the previously determined $I_{STO,5V,SMU}$ factor to the configuration GUI field.

The power/energy results displayed when running the "Monitoring Mode" should be consistent with those transferred from the STO pin.

Application firmware

The values read from the APMxCHG5V registers can now be converted to power (watts) as follows:

$$P_{CHG5V} = D_{CHG} \cdot I_{STO,5V,SMU} \cdot V_{STO}$$

- D_{CHG} is determined as described in the AEM13921 datasheet.
- V_{STO} can be determined by reading the STO register.

To convert the results into energy, multiply the power by the APM window, ideally as measured by the application circuit.

Copyright © 2026 e-peas SA

6. Revision history

Revision	Date	Description
1.0	07/09/2026	Creation of the document.

Table 1: Revision history

 Copyright © 2026 e-peas SA