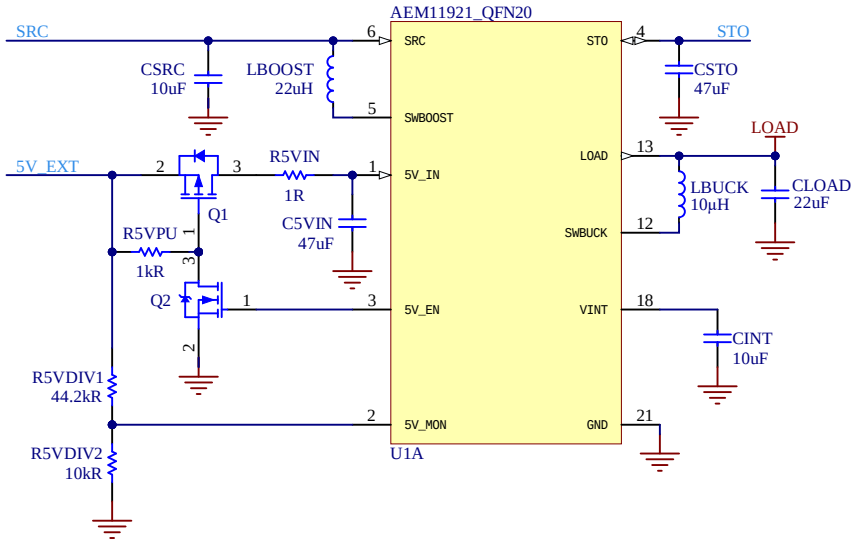

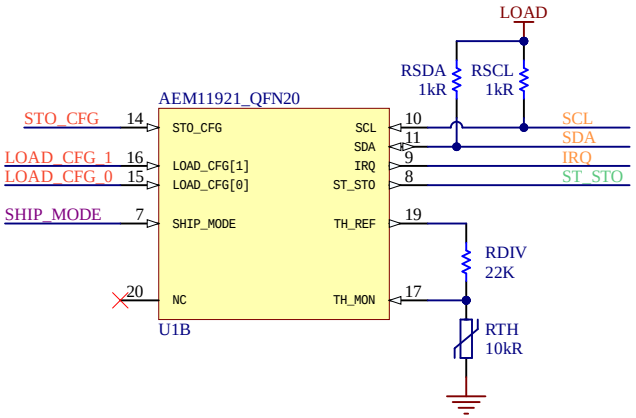

Title: ***AEM11921 QFN20 Snippet***		*e-peas S.A.* *Bd Baudouin 1er N°19* *1348 Ottignies-Louvain-La-Neuve* *Belgium*
Date: 09-Nov-26	Size: A4	
File: AEM11921_QFN20_Snippet.SchDoc	Sheet 1 of 1	